Ordnance Survey base mapping supplied by Welsh Government 2019, © Crown copyright and database rights [2019] Ordnance Survey

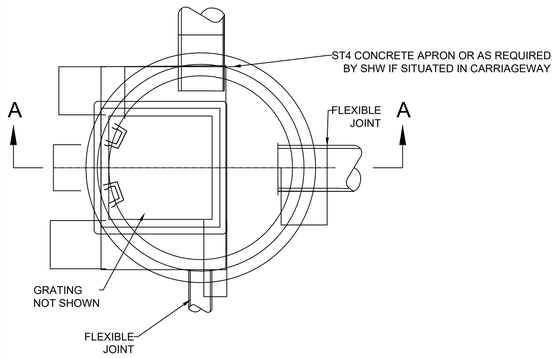

CATCHPIT PLAN

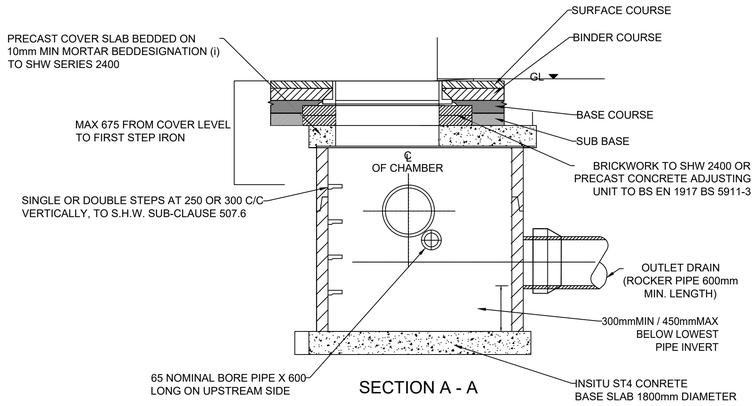

SECTION A - A

TYPICAL CATCHPIT DETAIL
SCALE - 1:20

CATCHPIT NOTES:

1. ALL DIMENSIONS ARE IN MILIMETRES
2. CATCHPIT TO BE CONSTRUCTED IN PRECAST CONCRETE TO BS EN 1917 AND BS 5911-3.
3. MORTAR TO BE DESIGNATION (i) TO SHW SERIES 2400.
4. PIPE TO BE BUILT INTO CATCHPIT TO DRAIN LOWER PORTION OF FILTER TRENCH, IT IS NOT REQUIRED FOR CARRIER DRAIN CONNECTIONS OR IN CONTAMINATED GROUND AREAS WHERE STANKS ARE REQUIRED. PIPE IS TO BE PLACED ABOVE ANY CONCRETE BED TO FILTER DRAIN.
5. SEE SHW,SUB CLAUSE 507.7 REGARDING BACKFILLING/SURROUND TO CHAMBER.
6. ALL ST CONCRETE SHALL BE TO SHW,CLAUSE 2602.
7. CATCHPIT TO BE TYPE B UNLESS STATED OTHERWSE.

PIPE DIAMETER	ROCKER PIPE LENGTH
100mm-600mm	600mm
675mm-750mm	1000mm
OVER 750mm	1250mm

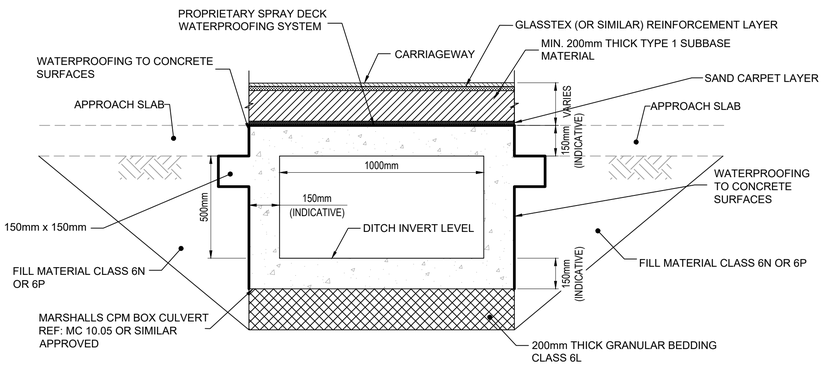

PRECAST CONCRETE BOX CULVERT - CARRIAGEWAY
1000mm x 500mm
SCALE - 1:15

NOTE
DETAIL DRAWINGS ARE INDICATIVE ONLY AND REPRESENT THE VISUAL INTENT OF THE HYDRAULIC NEEDS
FINAL WORKING DETAILS AND CALCULATIONS ARE THE RESPONSIBILITY OF THE SPECIALIST SUB-CONTRACTOR AND MUST BE APPROVED PRIOR TO FABRICATION.
SPECIALIST SUB-CONTRACTOR TO DEVELOP CUT-SHEETS BASED ON SET-OUT GEOMETRY ILLUSTRATED IN THESE DRAWINGS.
ALL SUB-CONTRACTOR DETAILS TO BE COORDINATED WITH SITE GEOMETRY OF INSTALLED STRUCTURE. DIMENSIONS GIVEN ARE INDICATIVE TO INDICATE GENERIC SIZE OF MODULES.

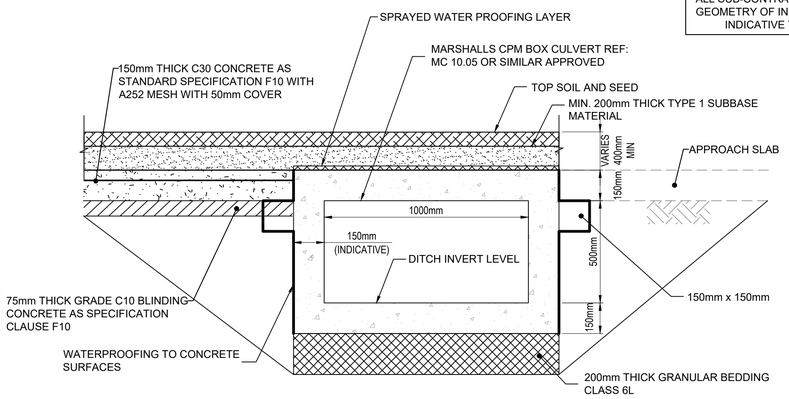

PRECAST CONCRETE BOX CULVERT - LAND CROSSING
1000mm x 500mm
SCALE - 1:15

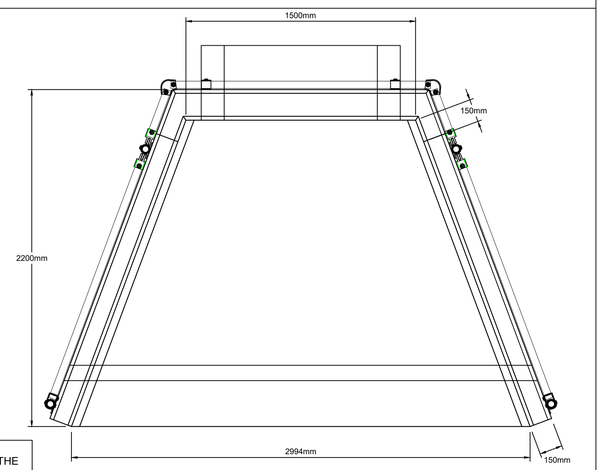

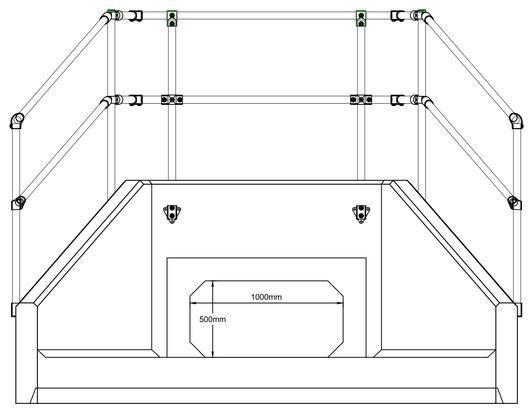

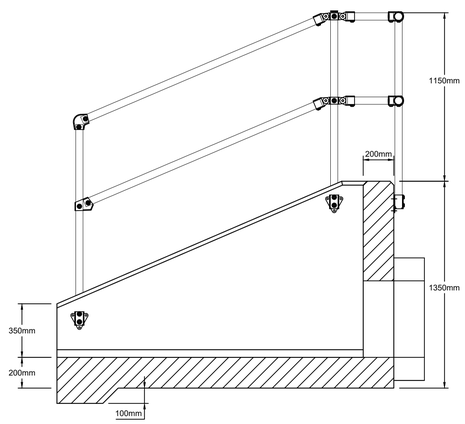

HEADWALL TYPE 5
SCALE - 1:20

NOTES

- ALL DIMENSIONS IN mm
- ALL MEASUREMENTS ± 1mm

SPECIFICATION INFORMATION

- OPENING IN BACK WALL CAST TO SUIT OUTSIDE OF THE BOX CULVERT INVERT LEVEL OF CULVERT CAN BE SET TO MANUFACTURER SPECIFICATION

BOX CULVERT, HEADWALL INSTALLATION

UNITS SHOULD BE BEDDED ON A MINIMUM 200mm THICK WELL COMPACTED CLASS 6L SELECTED GRANULAR MATERIAL
*MANUAL OF CONTRACT DOCUMENTS FOR HIGHWAY WORKS: VOLUME (MCHW1) SPECIFICATION FOR HIGHWAY WORKS, SERIES 600 (NOV 09).
SIT THE HEADWALL LEVEL OR WITH A SLIGHT FALL 1:50 FROM BOX CULVERT TO SPILL MOUTH

CONCRETE

CLASS DC-1 ACCORDING TO BS 8500-1:2015+A1:2016. BLINDING CONCRETE TO BE GRADE ST2 IN ACCORDANCE WITH BS 8500-1:2015+A1:2016
CONCRETE FORMED FINISHES AS FOLLOW:

CONCRETE FORMED FINISHES	
TOP OF BOX ROOF SLAB	U4
BURIED SURFACES	F1, U1
BOX SOFFIT AND INTERNAL WALLS	F2
EXPOSED WINGWALLS VERTICAL FACES	F6
HEADWALL EDGE FASCIA	F3
TOP OF HEADWALL / WINGWALLS	U3
F2 TO VERTICAL FACES OF SAFETY BARRIER BASE SLAB	
F1 TO OTHER BURIED SURFACES	

THE FOLLOWING CONCRETE STRENGTH CLASSES, EXPOSURE CLASSES AND COVERS TO REINFROCEMENT SPECIFIED AS FOLLOWS IN ACCORDANCE WITH BS EN 1992-2:2005, UK NA, BS EN 206:2013+A1 AND BS 8500-1:2015+A1

LOCATION	EXPOSURE CLASSES	CONCRETE STRENGTH	NOMINAL COVER TO REINFORCEMENT (mm)
RC PRECAST BOX BURIED STRUCTURE	XC3/C4, XD3, XF2	C40/50	45 + Δc
RC PRECAST HEADWALL / WINGWALL	XC3/4, XD3, XF4	C40/50	45 + Δc
CAST IN-SITU APPROACH SLAB	XC3/4, XD3, XF4	C32/40	55 + Δc

HANDLING

A. WEIGHT OF CONCRETE IS BASED ON 2.4 TONNE/M*+5% IS RECOMMENDED FOR SIZING LIFTING EQUIPMENT.
B. ALL LIFTING POINTS SHALL BE USED AS SPECIFIED IN SHOP DRAWINGS
C. UNIT TO BE LIFTED AS PER LIFTING DIAGRAM

REINFORCEMENT

TO BE GRADE B550B OR B550C IN ACCORDANCE WITH BS EN 10080:2005 AND BS 4449:2005

FILL MATERIAL

FILL MATERIAL AT TOP OF BOX STRUCTURE MINIMUM 200M THICK TYPE 1 SUBBASE MATERIAL IN ACCORDANCE WITH MANUAL OF CONTRACT DOCUMENTS FOR HIGHWAY WORKS, VOLUME 1 - SPECIFICATION FOR HIGHWAY WORKS - SERIES 0800 ROAD PAVEMENTS - UNBOUND, CEMENT AND OTHER HYDRAULICALLY BOUND MIXTURES.

FILL MATERIAL TO SIDE OF STRUCTURES TO BE CLASS 6N AND 6P IN ACCORDANCE WITH MANUAL OF CONTRACT DOCUMENTS FOR HIGHWAY WORKS, VOLUME 1 - SPECIFICATION FOR HIGHWAY WORKS - SERIES 0600 EARTHWORKS.

FILL MATERIAL BELOW OF STRUCTURE TO BE MINIMUM 200MM THICK GRANULAR BEDDING CLASS 6L IN ACCORDANCE WITH MANUAL OF CONTRACT DOCUMENTS FOR HIGHWAY WORKS, VOLUME 1 - SPECIFICATION FOR HIGHWAY WORKS - SERIES 0600 EARTHWORKS.

WATERPROOFING

TOP DECK SURFACE (BETWEEN HEADWALLS) WILL BE PROTECTED WITH A PROPRIETARY SPRAY APPLIED BRIDGE DECK WATERPROOFING SYSTEM TO MANUAL OF CONTRACT DOCUMENTS FOR HIGHWAY WORKS, VOLUME 1 - SPECIFICATION FOR HIGHWAY WORKS - SERIES 2000 WATERPROOFING FOR CONCRETE STRUCTURES.

ALL ACCESSIBLE CONCRETE SURFACES GREATER THAN 150MM BELOW FINISHED GROUND LEVEL TO RECEIVE WATERPROOFING TO BELOW CONCRETE SURFACES IN ACCORDANCE WITH MANUAL OF CONTRACT DOCUMENTS FOR HIGHWAY WORKS, VOLUME 1 - SPECIFICATION FOR HIGHWAY WORKS - SERIES 2000 WATERPROOFING FOR CONCRETE STRUCTURES.

MANUFACTURE

A. MANUFACTURE TO BS EN 15258:2008 PRECAST CONCRETE PRODUCTS - RETAINING WALL ELEMENTS
B. TOLERANCES TO BS EN 13369 CLAUSE 4.3.1.1

DESIGN

A. PERMANENT ACTIONS - MATERIAL DENSITIES AND LOAD FACTORS WILL BE AS LISTED IN BS EN 1990 AND BS EN1991 AND ASSOCIATED UK NATIONAL ANNEXES. IN PARTICULAR: NOMINAL DENSITY OF REINFORCED CONCRETE: 25KN/M3; NORMAL DENSITY FOR STEEL WORK:78.5 KN/M3; NOMINAL DENSITY OF HOT ROLLED ASPHALT FOR PAVEMENT AND SUBBASE: 23KN/M3
B. SNOW, WATER, WIND AND TERMAL ACTIONS - THERMAL ACTIONS TO BE IN ACCORDANCE WITH BS EN 1991-1-5 SECTION 6 & UK NA. WIND AND THERMAL ACTIONS ACTING TOGETHER WILL NOT BE CONSIDERED.
C. LIVE LOADS - LOAD MODEL 1 AND LOAD MODEL 2 IN ACCORDANCE WITH BS EN 1991-2: 2003 AS MODIFIED BY NA TO BS EN 1991-2:2003 WILL BE USED FOR CULVERTS BC1, BC2, BC4 AND BC6. TRAFFIC SURCHARGE ACCORDING TO EUROCODE DESIGN MODELS AND PD 6694-1:2011. GEOTECHNICAL COMBINATION ACCORDING TO EUROCODE AND PD 6694-1:2011
D. FOOTWAY VARIABLE ACTIONS - LOAD MODEL 4 (CROWD LOADING) IN ACCORDANCE WITH BS EN 1991-2, CL.4.3.5, TO BE APPLIED TO THE FULL DECK AREA FOR THE CULVERT. HORIZONTAL LOAD AT THE TOP OF THE PARAPET EQUAL TO 1.4 KN/M AS PER CLASS 3 BS 7818 AND ULS/SLS COMBINATION ACCORDING TO TABLE 2 BS 7818.
E. ACCIDENTAL ACTIONS - ACCIDENTAL ACTION / SERVICE VEHICLE TO BE IN ACCORDANCE WITH 5.6.3 OF BS EN 1991-2 AND UK NA2.
F. ACTIONS DURING THE CONSTRUCTION - ACTIONS ON THE SUPERSTRUCTURE WHILE BEING LIFTED INTO POSITION TO BE IN ACCORDANCE WITH 4.2 OF BS EN 1991-1-6 AND UK NA
G. SOIL PARAMETERS - EARTH PRESSURE COEFFICIENT FOR THE BURIED BOX IN ACCORDANCE WITH BS EN 1997-1:2004+A1:2003 AND UK NA+A1:2014 AND TABLE B1 OF PD 6694-1:2011. EARTH PRESSURE COEFFICIENT FOR HEADWALL AND WINGWALLS IN ACCORDANCE WITH BS EN 1997-1:2004+A1:2003 AND UK NA+A1:2014 AND PD 6694-1:2011. AS CONSERVATIVE ASSUMPTION, ANGLE OF FRICTION OF 30º AND SOIL DENSITY OF 19 KN/M3 WILL BE CONSIDERED IN THE DESIGN. SOIL PARAMETERS LISTED IN TABLE 3 OF THE "TECHNICAL NOTE" ISSUED ON DECEMBER 2020 WILL BE USED FOR THE BEARING CAPACITY AT THE EXACT FOUNDATION LEVEL FOR EACH CULVERT.

FABRICATION SPECIFICATION

A. MANUFACTURE IAW EN 1090-2 EXC CLASS 1
B. MATERIAL GRADE IS TO BE: BS EN 10025 S275
C. WELDING CARRIED OUT IAW EN 1090-2 PARA 7.5.4 - 7.5.18
D. ALL FILLET AND BUTT WELDS TO HAVE A MINIMUM THROAT THICKNESS OF 6MM & JOINTS TO BE FULLY WELDED WHERE POSSIBLE.
E. ENSURE VERTICAL FLATS ARE FULLY WELDED BOTH SIDES WHERE POSSIBLE.
F. ALL SHARP EDGES AND BURRS ARE TO BE REMOVED.
G. REMOVE ALL WELD SPLATTER.
H. HOLES BY PUNCHING ARE PERMITTED WITH REAMING.
I. GALVANISING IS CARRIED OUT AFTER FABRICATION TO BS EN:ISO 1461

PEDESTRIAN RESTRAINT SYSTEM

PEDESTRIAN RESTRAINT SYSTEM IS TO PREVENT THE FALL FROM THE HEIGHT AT THE TOP OF THE HEADWALL AND WINGWALLS. ACCORDING TO CD 377 REVISION 4, 8.13, THE RAILS AND THE POSTS SHALL MEET THE CLASS 3 NOMINAL LIVE LOADS IN BS 7818. AS PER TABLE 8.6, CD 377 MINIMUM HEIGHTS OF PEDESTRIAN PARAPETS ABOVE THE ADJACENT PAVED SURFACE NEEDS TO BE 1150MM.

AECOM

PROJECT
LLANMAES VILLAGE FLOOD ALLEVIATION SCHEME

CLIENT
VALE OF GLAMORGAN COUNCIL

VALE of GLAMORGAN
BRO MORGANNWG

CONSULTANT
AECOM
1 CALLAGHAN SQUARE
CARDIFF
CF10 5BT
TEL: (029) 20674600
FAX: (029) 20674699

STATUS
DETAILED DESIGN

ISSUE/REVISION

I/R	DATE	DESCRIPTION
C	07/07/2021	FOR PRICING
B	26/02/2021	DETAILED DESIGN
A	16/12/2020	DRAFT DETAILED DESIGN

PROJECT NUMBER
60160078

SHEET TITLE
LLANMAES VILLAGE
FLOOD ALLEVIATION SCHEME
STANDARD DETAILS
SHEET 5 OF 7

SHEET NUMBER
60160078-ACM-SHT-30-9000-CT-9004

This drawing has been prepared for the use of AECOM's client. It may not be used, modified, reproduced or relied upon by third parties, except as agreed by AECOM or as required by law. AECOM accepts no responsibility, and denies any liability whatsoever, to any party that uses or relies on this drawing without AECOM's express written consent. Do not scale this document. All measurements must be obtained from the stated dimensions.

ISO A1 594mm x 841mm
Approved: RM
Checked: ATz
Designer: KP
Project Management Initials:
Last saved by: RHYS.DAVIES2(2021-07-09) Last Plotted: 2021-07-09
Filename: F:\PROJECTS\HIGHWAYS - LLANMAES FLOOD ALLEVIATION SCHEME\5.0 CADD\5.3 DRAWINGS\SERIES 2600 - MISCELLANEOUS\30 9000 STANDARD DETAILS\60509148-ACM-SHT-30-9000-CT-9000.DWG

Printed on ___ % Post-Consumer Recycled Content Paper