Ordnance Survey base mapping supplied by Welsh Government 2019, © Crown copyright and database rights [2019] Ordnance Survey

ISO A1 594mm x 841mm
Approved: RM
Checked: ATz
Designer: KP
Project Management Initials:
Filename: \\UKCDF1FP002\UKCDF1FP002-V1TP\PROJECTS\HIGHWAYS - LLANMAES FLOOD ALLEVIATION SCHEME\5.0 CADD\5.3 DRAWINGS\SERIES 0500 - DRAINAGE_DUCTS\30 0510 CULVERT CROSSING SECTIONS\60160078-ACM-SHT-30-0500-CT-0510-0515.DWG
Last saved by: RHYS.DAVIES2(2021-02-26) Last Plotted: 2021-07-08

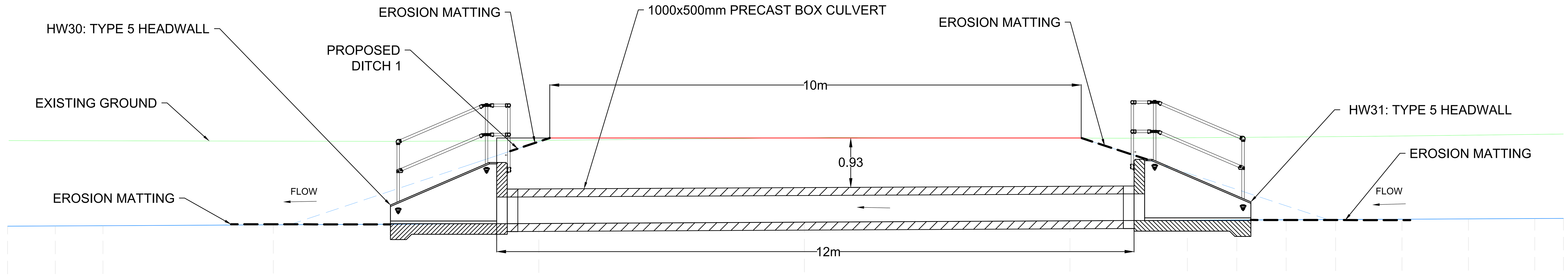

Level Datum =55.000

FARM CROSSING	60.332, 61.965, 61.967, 61.969, 60.429
DITCH 1	60.305, 60.310, 60.314, 60.330, 60.355, 60.380, 60.405, 60.416, 60.421, 60.425, 60.430, 60.436, 60.443, 60.449
GRADIENT	0.500, 0.500, 0.500, 0.500, 0.500, 0.500, 0.500, 0.500, 0.500, 0.500, 0.500, 0.500, 0.500, 0.500
E.G.L	61.915, 61.915, 61.914, 61.912, 61.905, 61.900, 61.898, 61.903, 61.919, 61.967, 61.972, 61.962, 61.959, 61.966, 61.971, 61.973, 61.980, 61.988, 62.000, 62.013, 62.014, 62.029
HORIZONTAL	R=30.000m L=19.546m; ℄ L=20.415m; R=−20.000m L=11.276m
VERTICAL	G=0.500 L=582.210m
CHAINAGE	575.000, 575.897, 576.794, 580.000, 585.000, 590.000, 595.000, 597.209, 598.139, 599.070, 600.000, 601.250, 602.500, 603.750

BC5
SCALE 1:50

0 1m 2m 4m
Scale 1: 50

NOTES

1. TO BE READ IN CONJUNCTION WITH ALL OTHER RELEVANT DOCUMENTATION / INFORMATION.
2. DIMENSIONS AND LEVELS ARE IN METRES UNLESS OTHERWISE STATED.
3. DO NOT SCALE FROM THIS DRAWING, USE ONLY PRINTED DIMENSIONS.
4. FOR CROSS SECTION REFERENCE PLAN REFER DRAWING NO. 60160078-ACM-SHT-30-0120-CT-0120
5. REFER TO DRAWINGS 60160078-ACM-SHT-30-0500-CT-0501 - 0508.

Printed on ___% Post-Consumer Recycled Content Paper

This drawing has been prepared for the use of AECOM's client. It may not be used, modified, reproduced or relied upon by third parties, except as agreed by AECOM or as required by law. AECOM accepts no responsibility, and denies any liability whatsoever, to any party that uses or relies on this drawing without AECOM's express written consent. Do not scale this document. All measurements must be obtained from the stated dimensions.

AECOM

PROJECT
LLANMAES VILLAGE FLOOD ALLEVIATION SCHEME

CLIENT
VALE OF GLAMORGAN COUNCIL

VALE of GLAMORGAN BRO MORGANNWG

CONSULTANT
AECOM
1 CALLAGHAN SQUARE
CARDIFF
CF10 5BT
TEL: (029) 20674600
FAX: (029) 20674699

STATUS
DETAILED DESIGN

ISSUE/REVISION

I/R	DATE	DESCRIPTION
B	07/07/2021	FOR PRICING
A	26/02/2021	DETAILED DESIGN

PROJECT NUMBER
60160078

SHEET TITLE
LLANMAES VILLAGE
FLOOD ALLEVIATION SCHEME
CULVERT CROSSING CROSS SECTIONS
SHEET 5 OF 7

SHEET NUMBER
60160078-ACM-SHT-30-0500-CT-0514