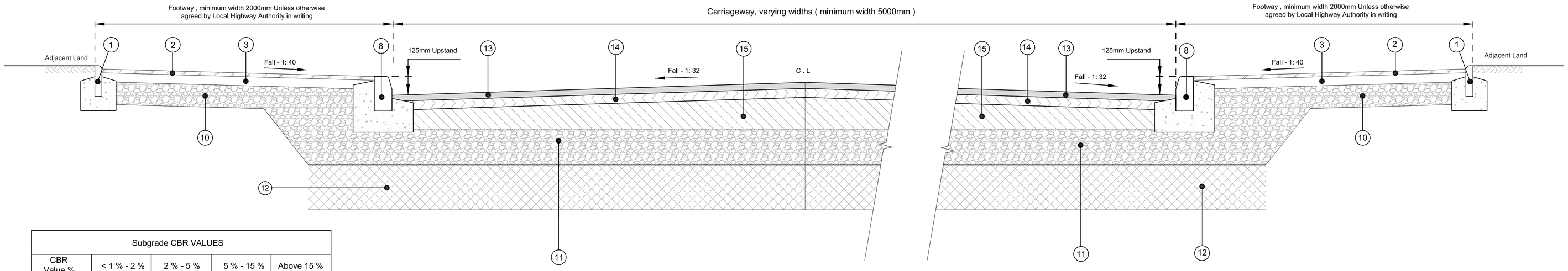

Subgrade CBR VALUES				
CBR Value %	< 1 % - 2 %	2 % - 5 %	5 % - 15 %	Above 15 %
Capping Thickness	600 mm	350 mm	-	-

Minimum Capping Layer thickness based on CBR Values

Typical section Through Carriageway and Footway's - 125mm Kerb Upstand

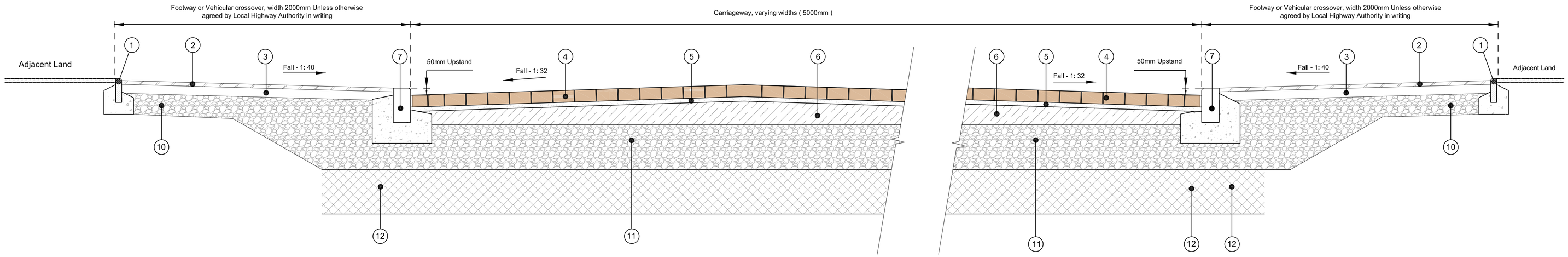

Typical section through Block paved section of carriageway and adjoining footways - 50mm Kerb upstand

KEY

1. 50 x 150 mm Precast concrete bullnosed edging, Type " EBN ", conforming to BS EN 1340 : 2003, laid on C6 / 8 or ST1 concrete bed and haunch (Note :- EBN to be replaced with Type " EF " fronting driveways.)
2. 25mm thickness of 6mm dense asphalt concrete surface course conforming to BS EN 13108-1 and clause 909 of the specifications for Highway Works, amended November 2008.with a minimum aggregate PSV value of 65 and a maximum AAV of 14. (AC6 dense surf 100/50 - PSV 65, AAV 14).

   Note Limestone aggregate will NOT be permitted in any surface course.
3. 60mm thickness of 20mm dense base and binder course asphalt concrete (recipe mixtures) conforming to BS EN 13108-1 And clause 906 of the specifications for Highway Works, amended November 2008 with a minimum aggregate PSV value of 65 and a maximum AAV of 14. (AC20 dense bin 160/220 rec - PSV 65, AAV 14).
4. Hanson or similar approved by the Local Highway Authority Precast Concrete Block Paving 200mm x 100 x 80mm thick, colour " Red Brindle " unless otherwise instructed by the Local Highway Authority. - *(Raised Junctions / Mews Court & Shared Surfaces)*
5. 50mm thickness (minimum) of bedding Sand 50mm compacted to 30mm, comply with BS 7533 Part 3 : 1997, Table D1 and D2 which shall be hard, sound and resistant to derogation and maintain an even moisture content (not wet) which will give maximum compaction during the laying process. Soft or calcareous sand shall not be used.
6. 130mm thickness (minimum) of 20mm Open Graded Dense Base / Binder Course, Asphalt concrete (recipe mixtures) Layed in two layers, conforming to BS EN 13108-1 and clause 906 of the Specifications for Highway Works, amended November 2008 with a minimum aggregate PSV value of 65 and a maximum AAV of 14. (AC20 dense bin 160/220 rec - PSV 65, AAV 14). - Temporary Running Surface.

6a. 190mm thickness of 20mm Open Graded Dense Base / Binder Course, Asphalt concrete (recipe mixtures) Layed in two layers, conforming to BS EN 13108-1 and clause 906 of the Specifications for Highway Works, amended November 2008 with a minimum aggregate PSV value of 65 and a maximum AAV of 14. (AC20 dense bin 160/220 rec - PSV 65, AAV 14). - Raised Junction and Plateau Area.

7. 125 x 255 mm Precast concrete Bullnosed kerb, Type BN conforming to BS EN 1340 : 2003, laid with a 50mm upstand, laid on C6 / 8 or ST1 concrete bed and haunch. Where a concrete edge beam has been laid, kerbs shall be bedded down in accordance with BS 7533-6:1999 on a layer 12 - 40 thick of 1:3 cement and sand mortar (by volume) and backed up with a grade C6/8 or St1 concrete haunch

7a. 125 x 150 mm Precast concrete Bullnosed kerb, Type BN conforming to BS EN 1340 : 2003, laid flush, laid on C6 / 8 or ST1 concrete bed and haunch. Where a concrete edge beam has been laid, kerbs shall be bedded down in accordance with BS 7533-6:1999 on a layer 12 - 40 thick of 1:3 cement and sand mortar (by volume) and backed up with a grade C6/8 or St1 concrete haunch

7b. 125 x 255 mm Precast concrete Inverted Bullnosed kerb, Type "BN3" conforming to BS EN 1340 ; 2003, laid "Flush to adjacent areas " on C6 / 8 or ST1 concrete bed and haunch. Where a concrete edge beam has been laid, kerbs shall be bedded down in accordance with BS 7533-6:1999 on a layer 12 - 40 thick of 1:3 cement and sand mortar (by volume) and backed up with a grade C6/8 or St1 concrete haunch

8. 125 x 255 mm Precast concrete half battered kerb, Type HB2 conforming to BS EN 1340 : 2003, laid with a 125mm upstand, laid on C6 / 8 or ST1 concrete bed and haunch. Where a concrete edge beam has been laid, kerbs shall be bedded down in accordance with BS 7533-6:1999 on a layer 12-40 thick of 1:3 cement and sand mortar (by volume) and backed up with a grade C6/8 or St1 concrete haunch.
9. ~~" Hanson " or similar approved by the Local Highway Authority Precast Concrete, Colour " Natural " (Grey) Blocks laid in a Low Rise Position 50mm upstand) in associated with Vehicular Crossover Blocks. Radii Blocks etc from the " Hanson" or similar approved range to achieve the required configuration.~~
10. 150mm thickness of Type 1 Unbound Granular material conforming to BS EN 13285 : 2003 and Clause 803 of the specifications for Highway Works, amended November 2007 and transported, laid, compacted and trafficked in accordance Clause 802 of the specifications for Highway Works, amended November 2004.
11. 300mm thickness of Type 1 Unbound Granular material conforming to BS EN 13285 : 2003 and Clause 803 of the specifications for Highway Works, amended November 2007 and transported, laid, compacted and trafficked in accordance Clause 802 of the specifications for Highway Works, amended November 2004.
12. Capping Layer. Where capping layer is required in addition to the required minimum thickness of Sub Base Layer (note 4) based on CBR values, the contractor shall provide the required thickness identified in the attached CBR table of Type 1 Unbound Granular material conforming to BS EN 13285 : 2003 and Clause 803 of the specifications for Highway Works.

KEY (CONT.)

13. 40mm thickness of Stone Mastic Asphalt Surface Course, 10mm aggregate with a minimum PSV of 68 and a 1,3mm surface texture conforming to BS EN 1308- 5 and Series 900 of the Specifications for Highway Works, amended August 2008. (SMA 10 Surface Course, 40 / 60 Binder, PSV Surface Texture 1.3mm AAV 14). Note Limestone aggregate will NOT be permitted in any surface course.
14. 60mm thickness of 20mm Binder Course Asphalt Concrete (recipe mixture) conforming to BS EN 1308- 1 and Clause 906 of the specifications for Highway Works, amended November 2008 with a minimum PSV of 65 and a maximum AAV of 14. (AC20 Dense Bin 45 / 60 rec - PSV 65, AAV 14).
15. 130 mm thickness of 32mm Base Course Asphalt Concrete (recipe mixture), Layed in two Layers, conforming to BS EN 1308- 1 and Clause 906 of the specifications for Highway Works, amended November 2008 with a minimum PSV of 65 and a maximum AAV of 14(AC32 Dense Bin 100 / 150 rec - PSV 65, AAV 14).

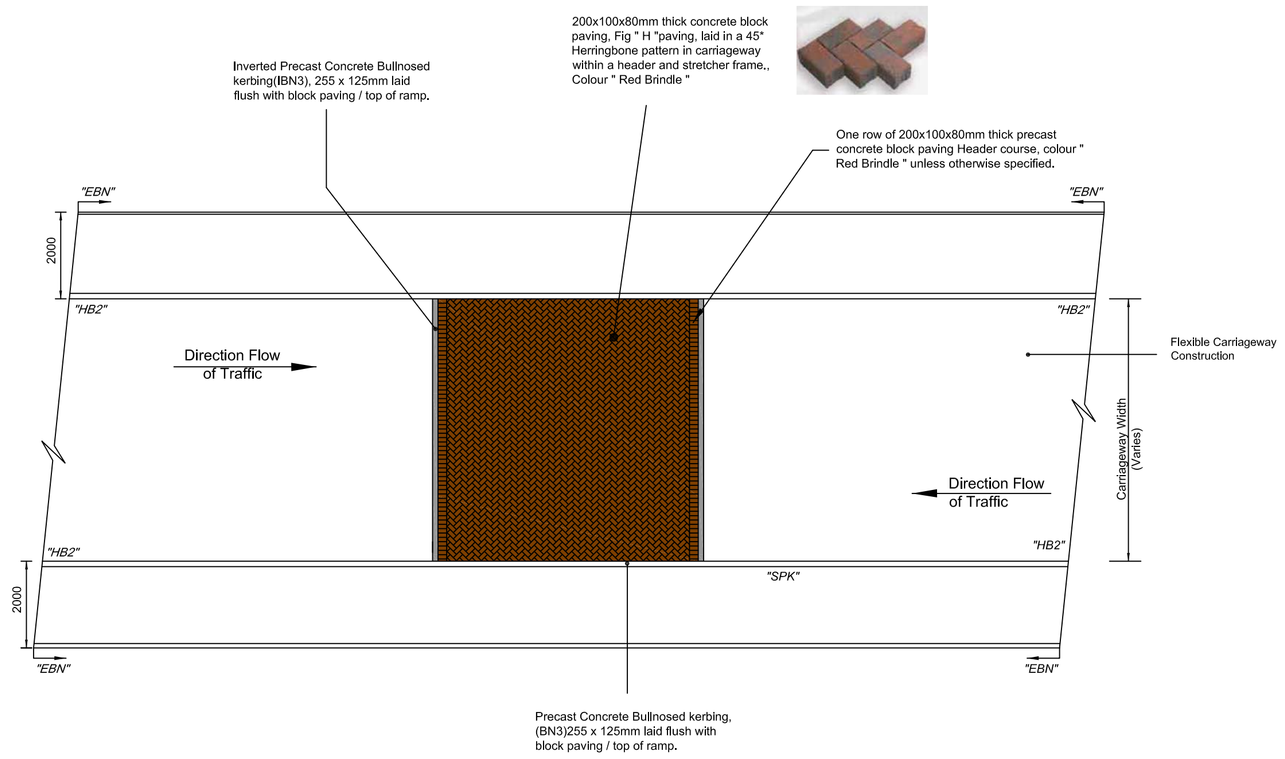

Plan View of Block Paved area along Access Road

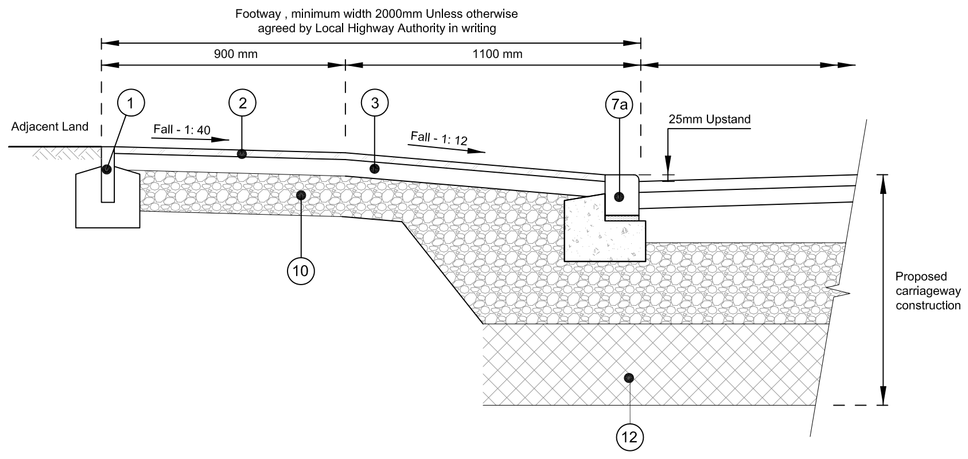

Typical Section Through Proposed New Vehicular Crossover

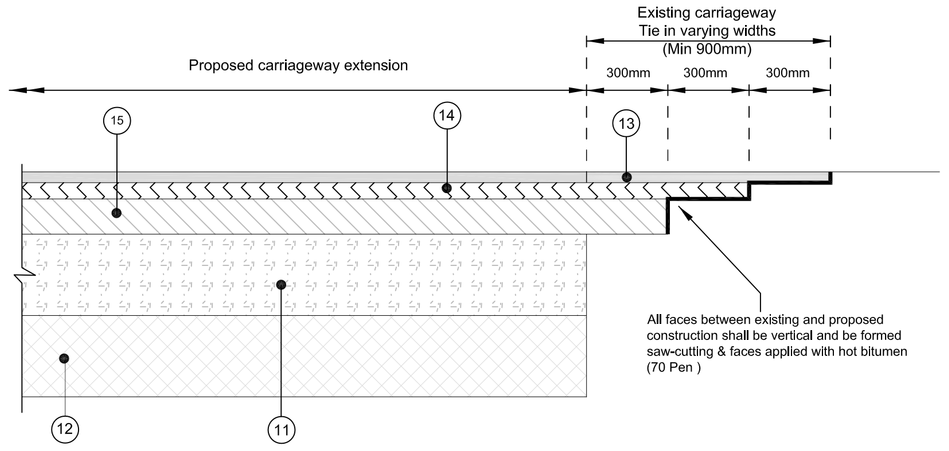

Typical section Through Carriageway Longitudinal Tie in Detail along " Access Road "

NOTES :-

1. All dimensions are to be checked prior to construction or manufacturing. Any discrepancy must be reported to the Engineer or his representative immediately.
2. Do not scale this drawing. work to figured dimensions only.
3. This drawing should be read in conjunction with all other relevant Engineering, Architectural, landscaping details, drawings and specifications and all relevant Vale of Glamorgan Council Standard Engineering Details.

Surfacing

4. The minimum carriageway thickness shall be 530mm. However greater construction depth may be required (capping Layers) depending on individual CBR values. (Refer table within drawing) .
5. CBR values are to be obtained at road formation levels.
6. All Bituminous surfacing works shall be machined layed unless other agreed in writing with the Local Highway Authority.
7. No wearing course shall contain and Limestone or Slag aggregate.
8. The specifications for Type 1 unbound granular material shall conform to BS EN 13285 : 2003 and Clause 803 of the Specification for Highway Works amended November 2007.
9. The transportation, laying and compacting and trafficking of Type 1 unbound granular material shall comply with the requirements of BS EN 13285 : 2003 and Clause 802 of the Specification for Highway Works, amended November 2004.
10. All bituminous material specifications for Asphalt Concrete shall conform to BS EN 13108 - 1 : 2006 and Clause 909 of the Specification for Highway Works amended November 2008.
11. All bituminous material specifications for Stone Mastic Asphalt (SMA) shall conform to BS EN 13108 - 5 : 2006 and Series 900 of the Specification for Highway Works amended August 2008..
12. The Testing for bituminous mixtures, material specifications shall conform to BS EN 13108 - 20 : 2006.
13. The specifications for Transporting, laying & compacting and type testing protocols for asphalt for roads and other paved areas shall conform to BS EN 4987 : 2007
14. Where gradients are steeper than 1 in 12, grit stone aggregate must be used.
15. Where it is envisaged that the Binder or Base Course materials within both the carriageway and footways areas are to be trafficked for more than 4 weeks before the application of the Surface Course, then a grit stone aggregate shall be used within the Binder content of 5,7 +/- 0,6% (Slag aggregate will not be permitted) .
16. In situations where the Binder or Base Course materials are not covered immediately with the Surface or Binder Course respectively the Binder and Base Courses shall be sprayed with a hot sealing tack coat of bituminous splay in accordance with Clause 920 of the Specification for Highway Works amended November 2007 prior to laying of the Surface or Binder courses.

Kerbing and Edging

17. All precast concrete kerbing, channels, edgings and quadrants shall comply with BS EN 1340 : 2003 and their dimensions unless otherwise stated.
18. All precast concrete kerbing, channels, edgings and quadrants shall be layed in accordance with BS 7533 Part 6 : 1999 unless otherwise instructed by the Highway Authority's representative.
19. All insitu concrete for foundations & Haunch shall be grade C6 / 8 or ST1 concrete in accordance with BS EN 206 - 1 & BS 8500 - 2 : 2006.
20. The foundation thickness shall be increased as necessary to rest on the carriageway sub-base.
21. Concrete edge beams shall have a minimum depth of 150mm & sufficient width to accommodate the unit & the concrete haunch.
22. Where precast concrete kerbs are to be laid on existing concrete edge beam, a hardened concrete foundation / haunch or existing carriageway base. Units shall be bedded down in accordance with BS 522 - 6 : 1999 in a layer of 12 - 40 mm thick of 1 : 3 cement and sand mortar (by Volume) and backed with C6 / 8 or ST1 concrete haunch.

Concrete Block Paving

23. All precast concrete block paving and associated kerb setts (where specified)shall be " Hanson Formpave " or similar approved, conforming to BS EN 1338 : 2003 which shall be laid in accordance with the manufacturers recommendations.
24. All precast concrete block paving shall be 200mm long x 100 wide x 80mm thick, colour " Grey " within carriageway, " Charcoal " within footway and " Red Brindle " located between carriageway rumble strip area.
25. All standard precast concrete kerb setts (where specified)shall be laid in a " low Rise " position (50mm upstand)and Natural in colour grey), unless otherwise instructed by the Local Highway Authority.
26. All block paving sand to be used as bedding course shall comply with BS 7533 Part 3: 1997, Table D1 and D2 which shall be hard, sound and resistant to degregation and maintain an even moisture content (not wet) which will give maximum compaction during the laying process. Soft or calcarious sand shall not be used.
27. All sand for jointing shall comply with BS 7533 Part 3 : 1997, Table D3.
28. All block paving shall be plate vibrated with a plate area 0,35 - 0.5m2 , force range 75 - 100 KN/m2 and a frequency range of 75 - 100 Hz.
29. Any area of paving which settles must be related to the satisfaction of the Highway Authority.
30. Where early trafficking leads to migration of the jointing sand , areas to be re-sanded to refill the open joints.

Revisions

Project: Cross Common Road Dinas Powys

Client: Eden STONE HOMES

Drawing: Highway Construction Details Sheet 1 of 4

Scale: N.T.S. @ A1 | Date: June 2017 | Drawn by: SD

Drawing No: 10157-105-01 | Rev:

PHOENIX DESIGN Partnership Ltd.
Unit 9, Westway Garage, Marksbury, Bath. BA2 9HN tel. 01761 479950
Titan House, Lewis Road, Cardiff. CF24 5BS tel. 029 2049 0771
email. enquiries@phoenixdp.co.uk www.phoenixdp.co.uk

This drawing is the copyright of Phoenix Design Partnership Ltd. No liability will be accepted for amendments by others to either the printed or digital format.

Drg.Status: